# Hy-Lok FT Series

## Micron Tee Filters

Catalog No. H-F100
May. 2010

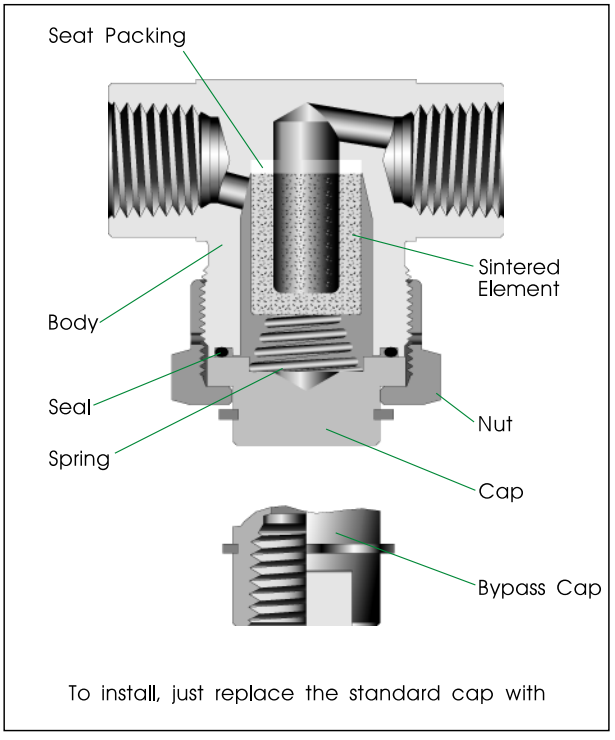


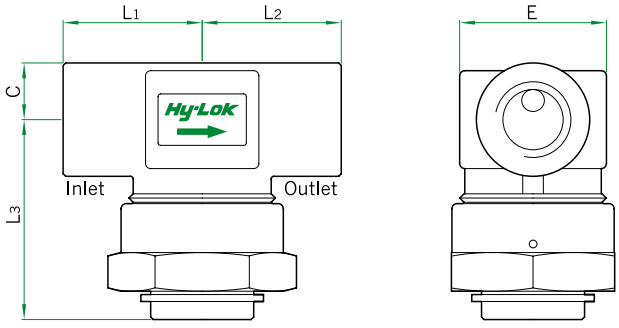


## Table of Dimensions

| Basic Part No. | | | Orifice | End Connections | Dimensions | | | | |
|---|---|---|---|---|---|---|---|---|---|
| | | | | Inlet & Outlet | $L_1$ | $L_2$ | $L_3$ | C | E |
| FT | H | -4T- | 4.4 | 1/4" Hy-Lok | 33.0 | 33.0 | 38.8 | 11.0 | 28.5 |
| | H | -6T- | | 3/8" Hy-Lok | 36.2 | 36.2 | | | |
| | H | -8T- | | 1/2" Hy-Lok | 38.7 | 38.7 | | | |
| | F | -2N- | | 1/8" Female NPT | 25.0 | 25.0 | | | |
| | M | -4N- | | 1/4" Male NPT | 25.5 | 25.5 | | | |
| | F | -4N- | | 1/4" Female NPT | 27.0 | 27.0 | | | |
| | F | -6N- | | 3/8" Female NPT | | | 41.0 | 12.7 | |
| | F | -8N- | | 1/2" Female NPT | 31.0 | 31.0 | 44.0 | 15.8 | 31.75 |

All dimensions are in millimeters.

## Features

- **SS316 body** material as standard
- **Replacement of filter elements** with body in line
- **Compact and robust** integral union bonnet design
- **Particle trapping for clean fluid**

## Technical Data

- **Maximum Operating Pressure:**
  6000 psig @ 70°F(21°C)for Stainless Steel
  3000 psig @ 70°F(21°C)for Brass
- **Operating Temperature:** -60°F to 400°F (-51°C to 204°C)
- **Effective Filteration Area:**
  1.73 sq. in. (0.0011 sq. meter) for all sizes.

### *Materials of Construction*

| Description | Material / ASTM Specification | |
|---|---|---|
| Bady | SS 316 - A479 or A182 | Brass / B16 |
| Cap | SS 316 / A479 | |
| Bypass Cap | | |
| Nut | | |
| Sintered Element | 316 Stainless Steel | |
| Seat Packing | PTFE | |
| Seal | Viton | |
| Spring | SS 302 | |

### *Filter Element and Cv*

| Element Micron Rating | Filtered Particle Size | Cv |
|---|---|---|
| 1 | 1 micron | 0.01 |
| 10 | 10 micron | 0.02 |
| 50 | 50 micron | 0.11 |
| 100 | 100 micron | 0.30 |
| 150 | 150 micron | 0.42 |

### *Operation and Filter Replacement*

The filter element, which is made of sintered stainless steel, is porous and has lots of tiny holes. The particles bigger than the holes are not allowed to pass through, hence clean fluid. After certain period, the holes may be blocked by particles and pressure drop will increase. This depends upon the total flow through elements and cleanliness of upstream flow. The element needs to be replaced for clean fluid with minimum pressure drop.

**HY-LOK CORPORATION**

©1997, 1998, 2002, 2003, 2010 HY-LOK CORPORATION All rights reserved

## How to Replace the Element

1. Bleed the line to remove system pressure.
2. Unscrew the nut while holding the body steady with back-up wrench.
3. Remove the nut, cap, spring, and seal all together.
4. Remove the element out of the body and pull out the seat packing with care. It is recommeneded to replace the seat packing and seal at the same time.
5. Clean metal parts if necessary.
6. Insert new element into tapered bore with smooth faced tool until it seats firmly.
7. Put the seal back in place.
8. Place the spring on the cap and retighten the nut.

## Bypass Cap

For sampling and purging, bypass cap is available with 1/4" female NPT threaded port.

## *Spares*

For maintenance and changeover to bypass, the following spares are available.

| Part No. | Description | Q'ty / Pack |
|---|---|---|
| KFT - F | Filter | 1 pc |
| KFT - P | Seat Packing | 1 pc |
| KFT - S | Seal | 1 pc |
| KFT - B | Bypass Cap | 1 pc |

## *Pressure Drop vs Flow Rate of Air*

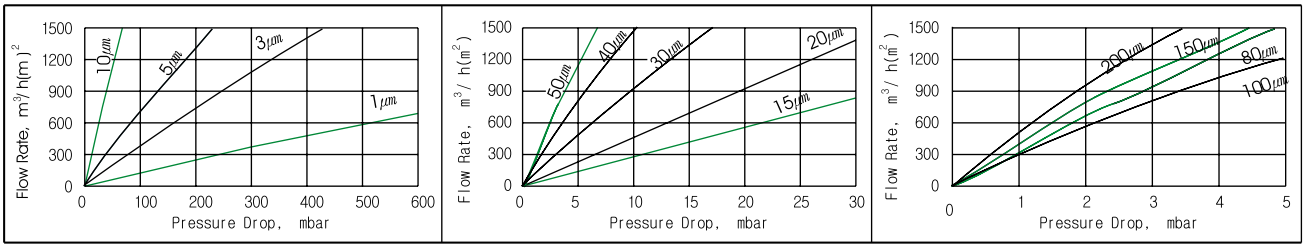


*Please note the above Flow Rate is elements' co-efficient in cubic meters per hour per square meter. To get the flow rate of FT series filter, find the flow rate in the graph and then multiply it with effective filtration area on previous page.*

# Ordering Information

FT — **Filter Type Designator**

F — **End Connection Designator**
- M : Both End Male Pipe Thread
- F : Both End Female Pipe Thread
- H : Both End Hy-Lok Tube Fitting

B — **Bypass Cap Designator** *
- Nil : Without(Standard)
- B : With

4N — **Size Designator**

10 — **Filter Element Designator**
- 1 : 1 micron
- 10 : 10 micron
- 50 : 50 micron
- 100 : 100 micron
- 150 : 150 micron

S316 — **Body Material Designator**
- S316 : 316 Stainless Steel
- BRAS : Brass

• NPT (ISO/BSP)

| Thread(in.) | 1/8 | 1/4 | 3/8 | 1/2 |
|---|---|---|---|---|
| Designator | 2N(R) | 4N(R) | 6N(R) | 8N(R) |

• Tube

| O.D.(in) | 1/4 | 3/8 | 1/2 |
|---|---|---|---|
| Designator | 4T | 6T | 8T |

**Note** * : No designator is reguired for standard e.g. FTF-4N-10-S316

## *SAFETY in VALVE SELECTION*

Proper installation, materials compatibility, operation and maintenance of these valves are the responsibility of the user. The total system design must be taken into consideration to ensure optimal performance and safety.